Chapter 2. I&C Drawings and Documentation

2.1. Introduction to Plant Design

Plant design (process plant design, power plant design, etc.) refers to the automation technologies, work practices and business rules supporting the design and engineering of process and power plants. Such plants can be built for chemical, petroleum, utility, shipbuilding, and other facilities. Plant design is used to designate a general market area by the many vendors offering technologies to support plant design work.

2.2. Process diagrams

The 'process' is an idea or concept that is developed to a certain level in order to determine the feasibility of the project. 'Feasibility' study is the name given to a small design project that is conducted to determine the scope and cost of implementing the project from concept to operation.

To keep things simple, for example, design an imaginary coffee bottling plant to produce bottled coffee for distribution. Start by creating a basic flow diagram that illustrates the objective for the proposed plant; this diagram is called a "Process Block Diagram".

2.2.1. Process block diagram

The block diagram shown in Figure 2.1 is where it all starts. It is here that the basic components are looked at and the basic requirements determined. This is a diagram of the concept, giving a very broad view of the process.

The example below has all ingredients listed and shows that milk, sugar and black coffee make up different permutations of the final product. With this philosophy diagram complete, there is a need to determine the technical requirements. This is done by simultaneously developing two documents; the 'Process Flow Diagram' and the 'Process Description Manual'.

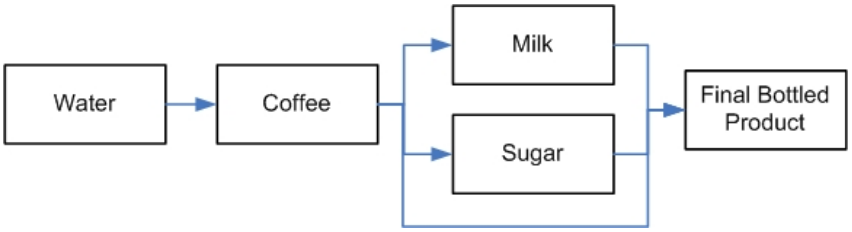

Figure 2.1
Basic flow diagram of Coffee bottling plant

2.2.2. Process flow diagram or piping flow diagram (PFD)

The PFD is where we start to define the process by adding equipment and the piping that joins the various items of equipment together. The idea behind the PFD is to show the entire process (the big picture) on as few drawing sheets as possible, as this document is used to develop the process plant and therefore the process engineer wants to see as much of the process as possible. This document is used to determine details like the tank sizes and pipe sizes.

Those familiar with mimic panels and SCADA flow screens will notice that these resemble the PFD more than the piping and instrumentation diagram (P&ID) with the addition of the instruments, but not the instrument function.

Mass balance: In its most simple form, what goes in must come out. The totals at the end of the process must equal the totals fed into the system.

2.2.3. Process description

The process description details the function / purpose of each item of equipment in the plant. This description should contain the following information:

- Installation operation – The installation produces bottled coffee
- Operating principles – Each part of the process is described
- Water supply – Filtered water at ambient temperature is supplied to the water holding tank, the capacity of the tank should be sufficient for all recipes
- Coffee supply – Due to the viscosity of the coffee syrup, the syrup is fed from a pressurized vessel to the autoclave, this line should be cleaned frequently with warm water. There will be batches of caffeinated and decaffeinated coffee, the coffee tanks and pipelines must be thoroughly cleaned between batches
- Milk supply – There will be an option for low fat or full cream milk, the milk supply should be sufficient for three days operation and should be kept as close to freezing as possible to ensure longevity of the milk
- Sugar supply – Sugar will be supplied in a syrup form, we will offer the coffee with no sugar, 1 teaspoon (5 ml of syrup) or two teaspoons (10 ml of syrup). Syrup lines must be cleaned on a regular basis
- Circuit draining/make-up – How to start-up or shutdown the facility, cleaning and flushing

- Liquid characteristics – A detailed description on analysis of each liquid type in the system. Includes specific gravity, viscosity, temperature, pressure, composition etc.
- Specific operating conditions linked to the process – The installation operates 24 hours a day, 365 days a year. As the installation deals with foodstuff, all piping and vessels are to be manufactured from stainless steel
- Specific maintenance conditions linked to the process – Hygiene levels to be observed
- Specific safety conditions linked to the process – Hygiene, contamination of product
- Performance requirements – This section describes the amount of product the plant must be able to produce in a given time frame.

PFD now starts to look something like the Figure 2.2 shown below.

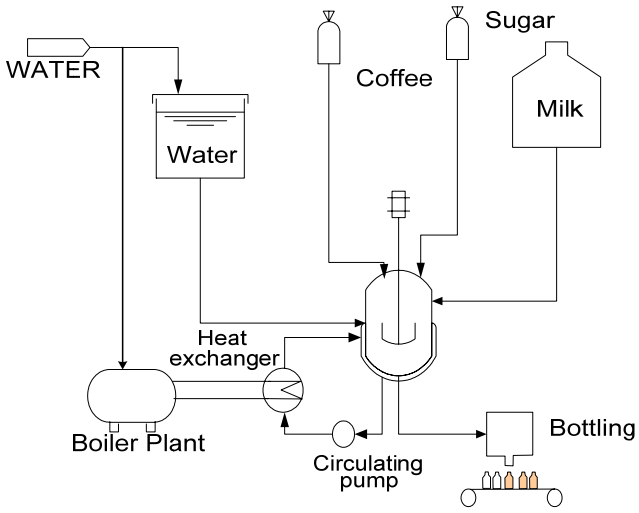

Figure 2.2
Process flow diagram

2.2.4. Piping and Instrumentation Diagram (P&ID)

The Piping & Instrumentation Diagram, which may also be referred to as the Process & Instrumentation Diagram, gives a graphical representation of the process including hardware (Piping, Equipment) and software (Control systems); this information is used for the design construction and operation of the facility.

The PFD defines "The flow of the process" The PFD covers batching, quantities, output, and composition.

The P&ID also provides important information needed by the constructor and manufacturer to develop the other construction input documents (the isometric drawings, or orthographic physical layout drawings, etc.). The P&ID provides direct input to the field for the physical design and installation of field-run piping. For clarity, it is usual to use the same general layout of flow paths on the P&ID as used in the flow diagram.

The P&ID ties together the system description, the flow diagram, the electrical control schematic, and the control logic diagram. It accomplishes this by showing all of the piping, equipment, principal instruments, instrument loops, and control interlocks. The P&ID contains a minimum of text in the form of notes (the system description minimizes the need for text on the P&ID).

The typical plant operation's environment uses the P&ID as the principal document to locate information about the facility, whether this is physical data about an object, or information, such as financial, regulatory compliance, safety, HAZOP information, etc.

The P&ID defines "The control of the flow of the process" where the PFD is the main circuit; the P&ID is the control circuit. Once thoroughly conversant with the PFD & Process description, the engineers from the relevant disciplines (piping, electrical & control systems) attend a number of HAZOP sessions to develop the P&ID.

2.2.5. P&ID standards

Before development of the P&ID can begin, a thorough set of standards is required. These standards must define the format of each component of the P&ID. The following should be shown on the P&ID:

- Mechanical Equipment
- Equipment Numbering
- Presentation on the P&ID
- Valves
- Hand valves
- Control valves
- Piping
- Pipe numbering
- Nozzles & Flanges
- Equipment & instrument numbering systems

A completed P&ID may therefore appear as shown in Figure 2.3.

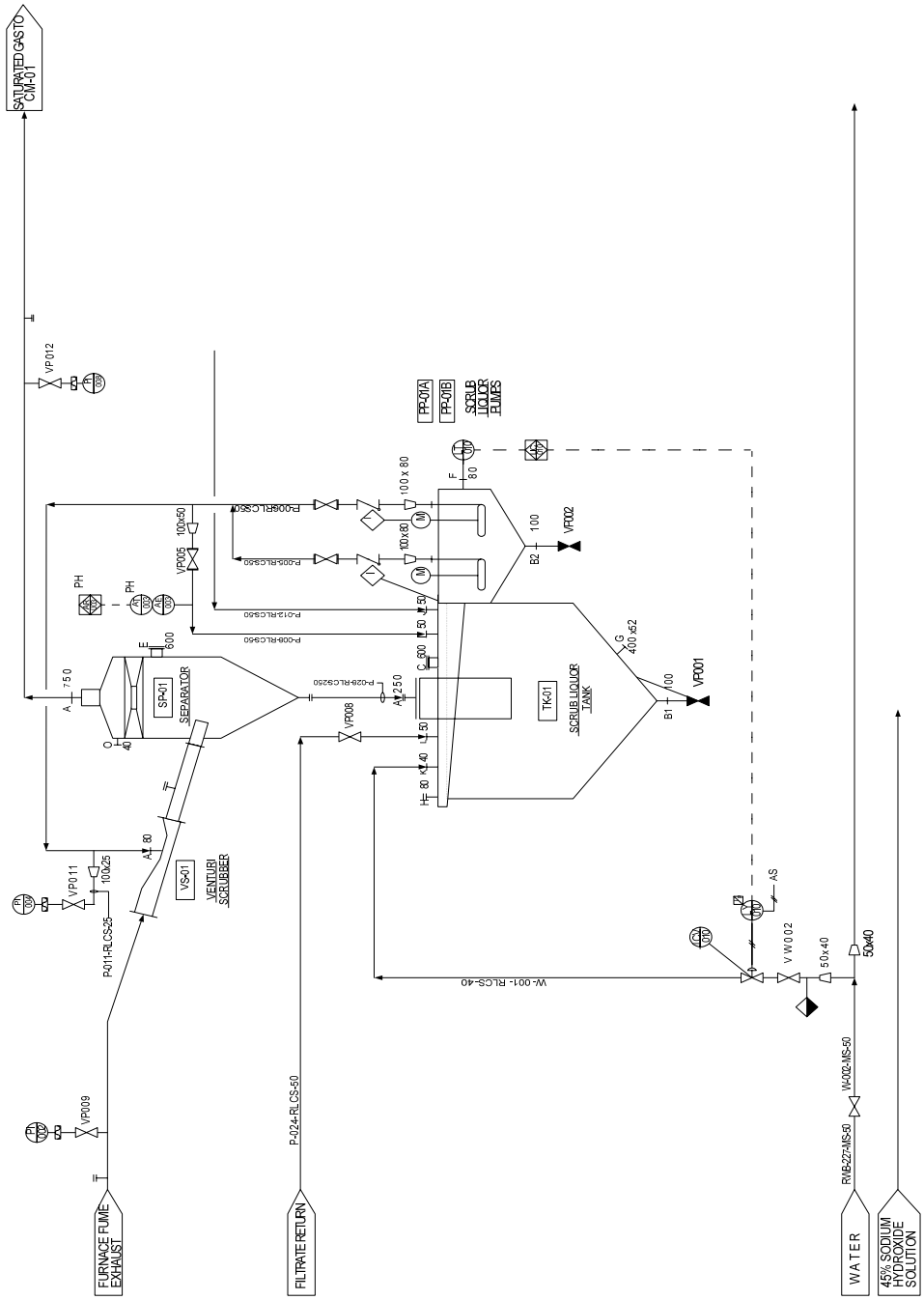

Figure 2.3
Completed P&ID

2.3. Instrumentation documentation

Instrumentation documentation consists of drawings, diagrams and schedules. The documentation is used by various people for different purposes. Of all the disciplines in a project, instrumentation is the most interlinked and therefore the most difficult to control.

The best way to understand the purpose and function of each document is to look at the complete project flow from design through to commissioning.

- Design
- Design criteria, standards, specifications, vendor lists
- Construction
- Quantity surveying, disputes, installation contractor, price per meter, per installation
- Operations
- Maintenance commissioning

2.3.1. Instrument list

This is a list of all the instruments on the plant, in the 'List' format. All the instruments of the same type (tag) are listed together; for example, all the pressure transmitters 'PT' are grouped together.

Table 2.1
Instrument list

Instrument index lists	Associated documentation such as loop drawing number, datasheets, installation details and P&ID.
Loop List	The same information as the instrument list but ordered by loop number instead of tag number. This sort of order will group all elements of the same loop number together.
Function	Gives a list of all the instrumentation on the plant and may include 'virtual' instruments such as controllers in a DCS or PLC.
Tag No	The instrument tag number as defined by the specification.
Description	Description of the instrument as denoted by the tag number.
Service Description	A description of the process related parameter.
Functional Description	The role of the device.
Manufacturer	Details of the manufacturer of the device.
Model	Details of the model type and number.

2.3.2. Instrument location plans

The instrument location drawing is used to indicate an approximate location of the instruments and junction boxes. This drawing is then used to determine the cable lengths from the instrument to the junction box or control room. This drawing is also used to give the installation contractor an idea as to where the instrument should be installed.

2.3.3. Cable racking layout

Use of the racking layout drawing has grown with the use of 3D CAD packages; this drawing shows the physical layout and sizes of the rack as it moves through the plant.

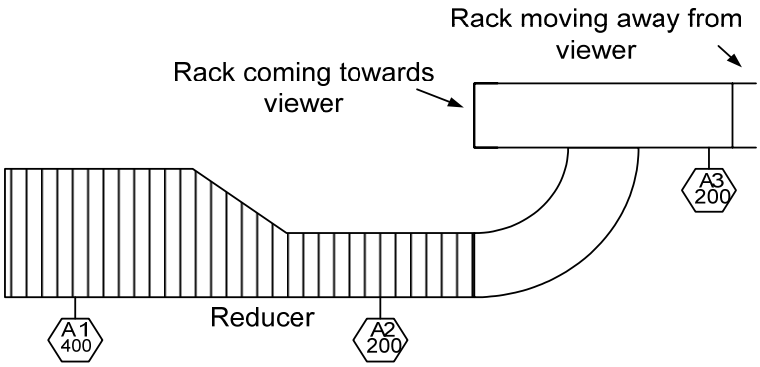

Figure 2.4
Cable racking layout

2.3.4. Cable routing layout

Prior to the advent of 3D CAD packages, the routing layout used a single line to indicate the rack direction as well as routing and sizes and was known as a 'Racking & Routing layout'.

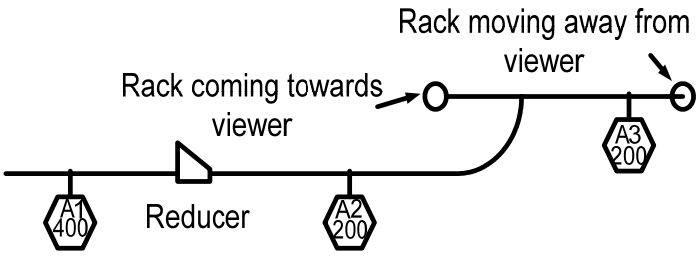

Figure 2.5
Cable routing layout

2.3.5. Block diagrams – signal, cable and power block diagrams

Cable block diagrams can be divided into two categories: Power and Signal block diagrams. The block diagram is used to give an overall graphical representation of the cabling philosophy for the plant.

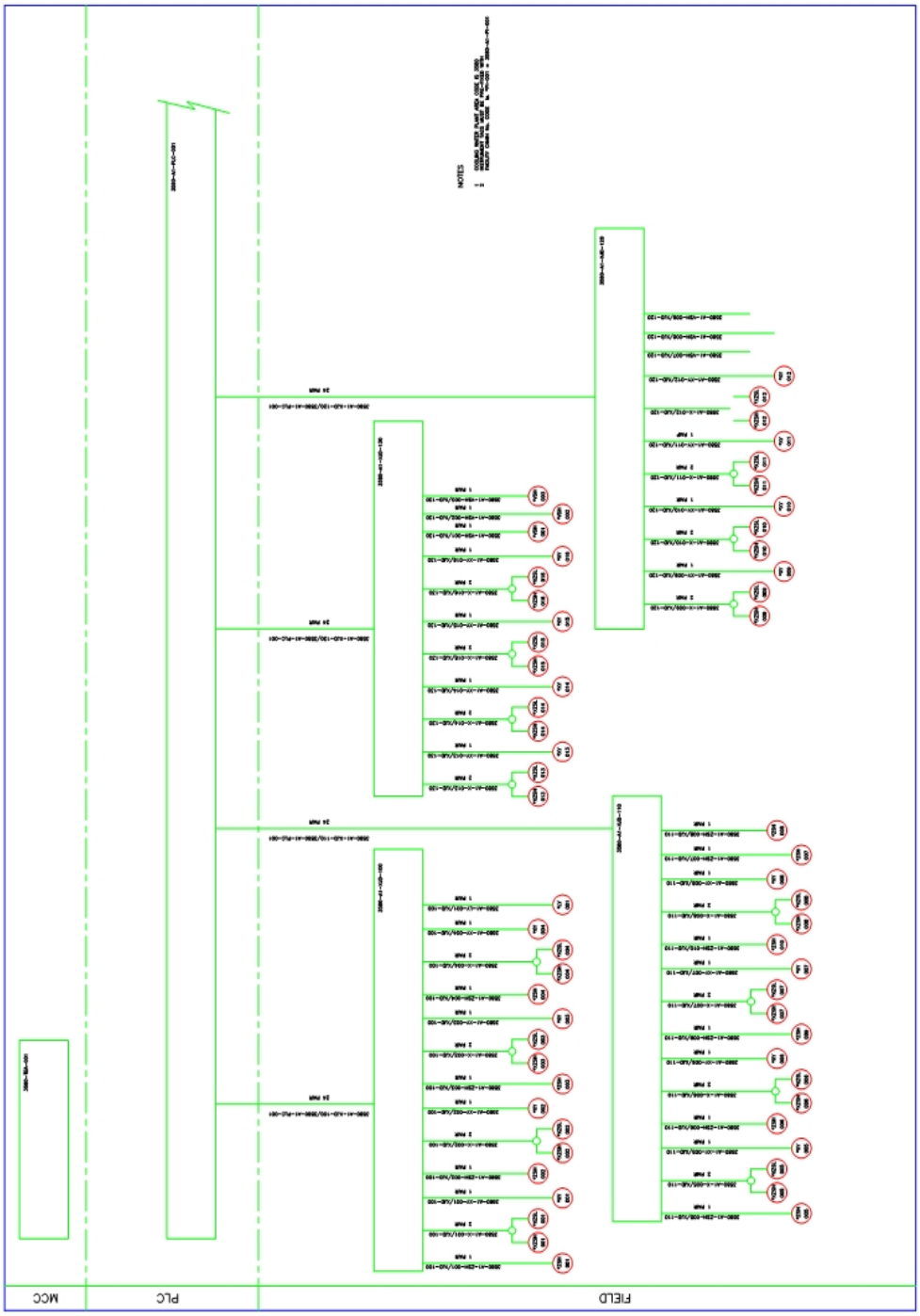

Figure 2.6
Block diagram

Table 2. 2
Field connections / Wiring diagrams

Field connections / Wiring diagrams

Function	To instruct the wireman on how to wire the field cables at the junction box.
Used by	The installation contractor. When the cable is installed on the cable rack, it is left lying loose at both the instrument and junction box ends. The installation contractor stands at the junction box and strips each cable and wires it into the box according to the drawing.

Table 2. 3
Power distribution diagram

Power distribution diagram

Function	There are various methods of supplying power to field instruments; the various formats of the power distribution diagrams show these different wiring systems.
Used by	Various people depending on the wiring philosophy, such as the panel wireman, field wiring contractor.

Table 2.4
Earthing diagram

Function	Used to indicate how the earthing should be done. Although this is often undertaken by the electrical discipline, there are occasions when the instrument designer may or must generate his own scheme – Eg. for earthing of zener barriers in a hazardous area environment.
Used by	Earthing contractor for the installation of the earthing. This drawing should also be kept for future modifications and reference.

Table 2.5
Loop diagrams

Function	A diagram that comprehensively details the wiring of the loop, showing every connection from field to instrument or I/O point of a DCS/PLC.
Used by	Maintenance staff during the operation of the plant and by commissioning staff at start up.

2.4. Electrical documentation

The electrical schematics section covers the layout of electrical schematic diagrams, lists and various symbols used.

2.4.1. The Load List

The load list is used to total the power supply requirements for each device per plant area or process. Load lists are made for each voltage level on the plant. The sample table shown below is a typical layout of a load list.

Table 2.6
Sample

Device	Voltage	Amps	Watts	VA	Total	Feeder
400-PMP-01	380					400-TAD-01

2.4.2. The Single Line Diagram

The single line diagram (sometimes called the one line diagram) uses single lines and standard symbols to show electrical cables, bus bars and component parts of a circuit or system of circuits. The single line diagram shows the overall strategy for system operation. Duplication of a 3-wire system is reduced by showing single devices on a single wire. These single line diagrams may be used in the monitoring and control systems like SCADA applications for the operation.

2.4.3. The schematic diagram (main and circuit)

Schematic diagram shows both the main circuit and the control circuit in far greater detail; here all three lines of a 3-phase system are shown. The schematic shows the detailed layout of the control circuit for maintenance and faultfinding purposes rather than the overall picture presented by the single line diagram.

A schematic diagram shows the following main features:

- Main circuits
- Control, signal and monitoring circuits
- Equipment identification symbols with component parts and connections
- Equipment and terminal numbering
- Cross references – indicating where on the diagram or sequential sheet, the related parts of the equipment can be found.

2.4.4. Plant layout drawings

The plant layout drawing gives a physical plant layout, where equipment is drawn to resemble the plant item it represents.

2.4.5. Racking and Routing

These drawings are used to show the layout of the plant racking systems, the size of the racks and the cable numbers of all the cables running on that section of the rack.

2.4.6. Installation Details

The installation detail shows the layout of the equipment and gives an itemized list of all the equipment on the drawing as well as notes on the installation.

2.4.7. Panel Layout

The panel layout drawing gives the dimensions of the panel, the layout of the equipment in the panel, an itemized list of all the equipment used as well as quantities. The notes detail various items like specification references (paint, powder coating) and general notes.

2.4.8. Other electrical documents

Cable schedule: This is used mainly for installation purposes. It gives a source and destination for each cable and specifies the type of cable.

Point to point schedule: This facilitates wiring installation by showing termination points at each end of every wire.

Hazardous area drawings: A plant location drawing (in both plan and elevation) which shows, by means of overlays, plant area classifications (by zone and gas group) for potential leak hazards throughout a plant.

Ladder Logic Schematics: These are detailed schematics of a ladder structure where the discrete rungs represent control circuits in an overall scheme. These are most often used in the basic IEC programming language in PLCs, but are sometimes used in hardwired relay circuits.